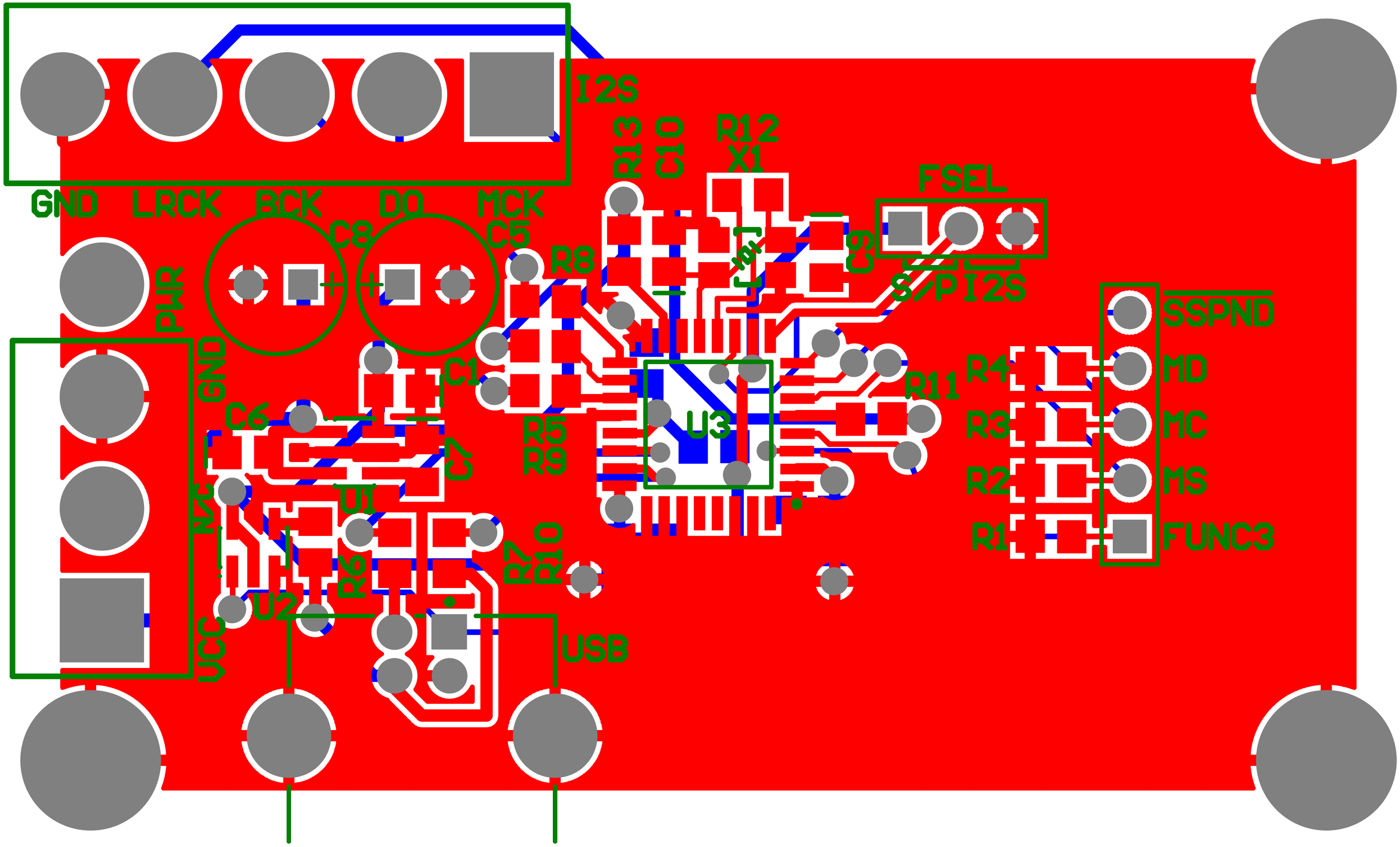
I2S
GND
LRCK
BCK
DO
MCK
C8
C5
R13
C10
R12
X1
FSEL
R8
C9
S/P
I2S
SSPND
MD
MC
MS
FUNC3
PWR
GND
C6
C1
R11
R4
R3
R2
R1
U3
R5
R9
C7
U1
R7
R10
R6
U2
VCC
USB

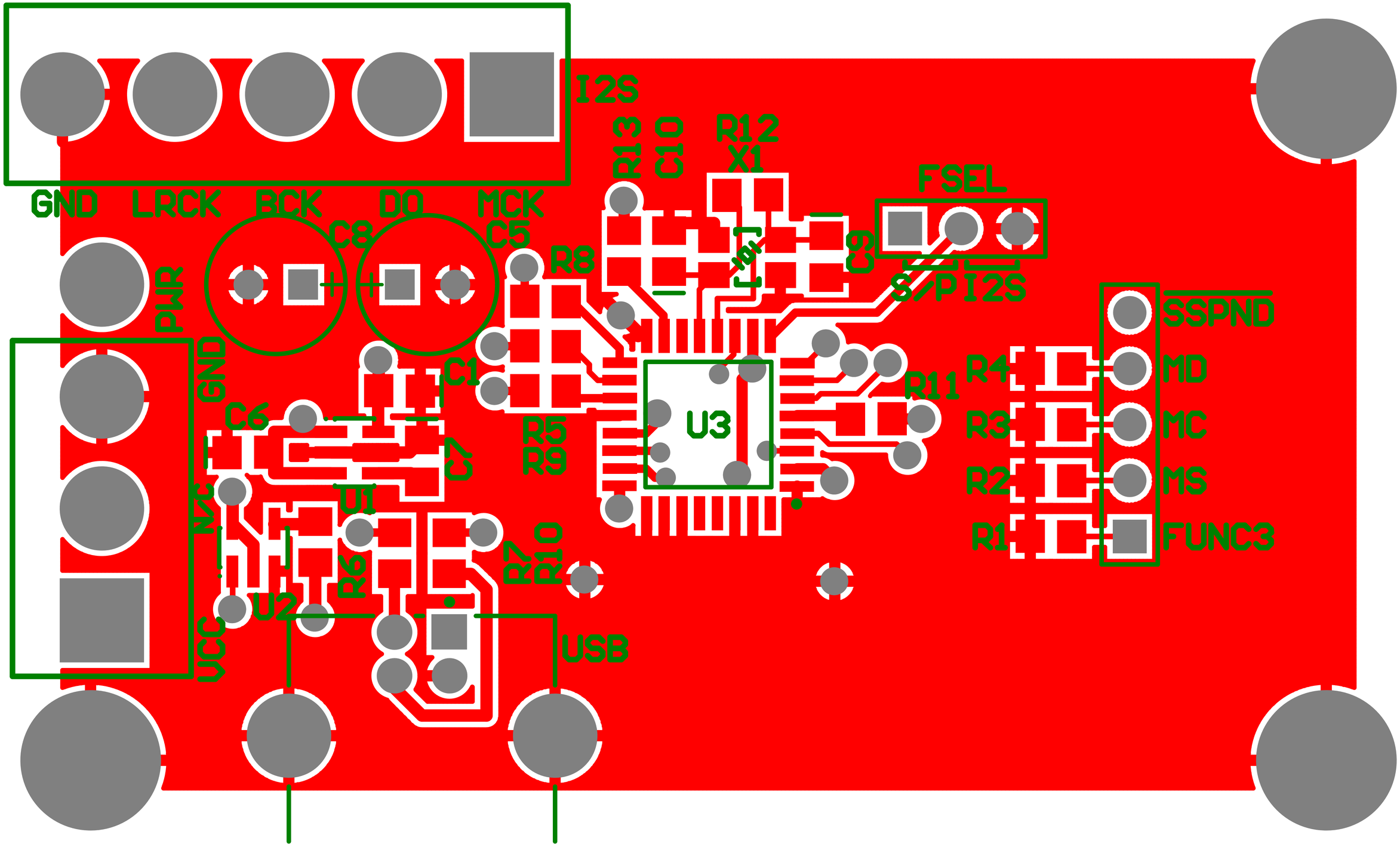
I2S
GND
LRCK
BCK
DO
MCK
C8
C5
R13
C10
R12
X1
FSEL
R8
S/P
I2S
SSPND
MD
MC
MS
FUNC3
PWR
GND
C6
C1
C7
R5
R9
U3
R11
R4
R3
R2
R1
VCC
U1
R6
R7
R10
U2
UCC
USB

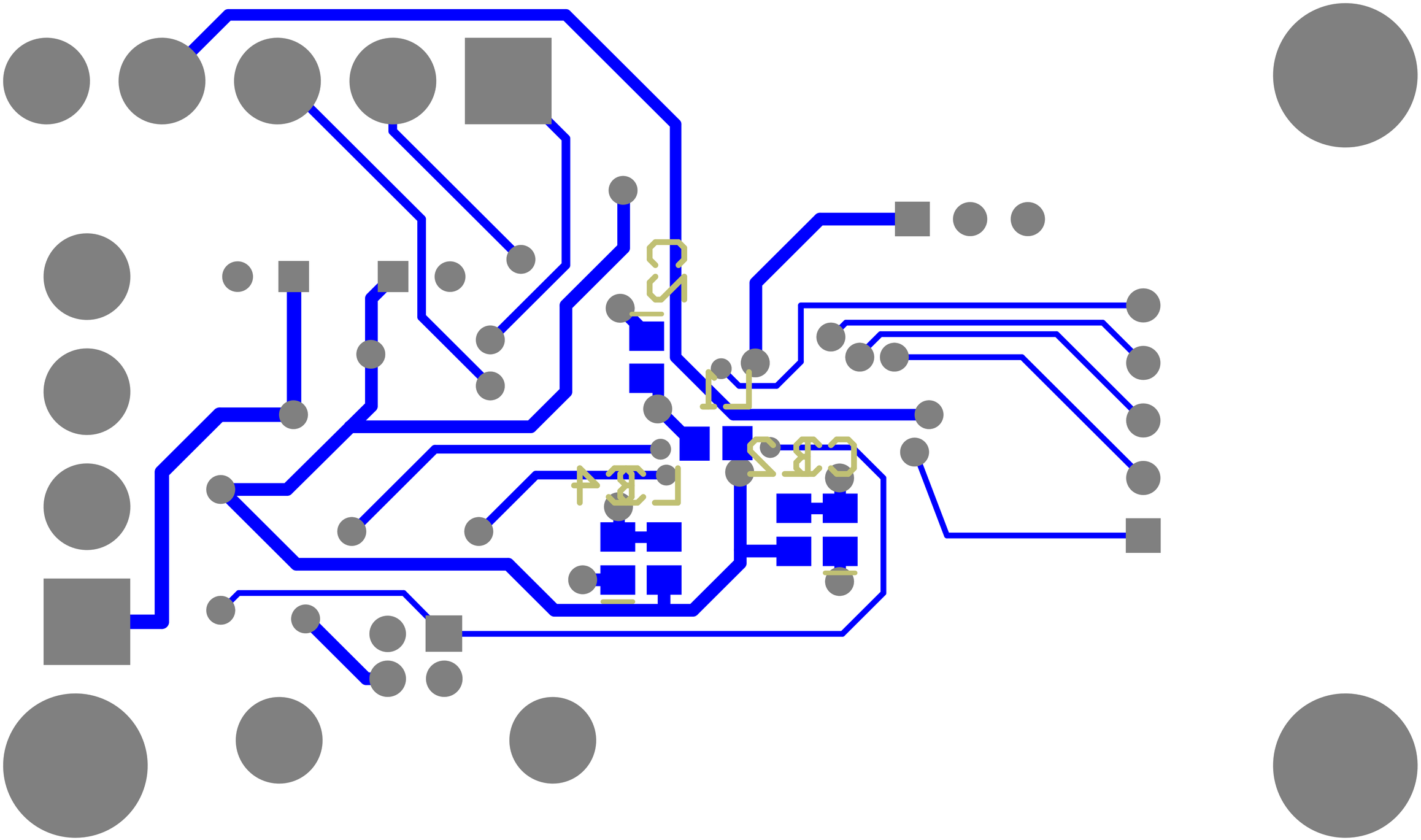
C3
C1
C2
C4

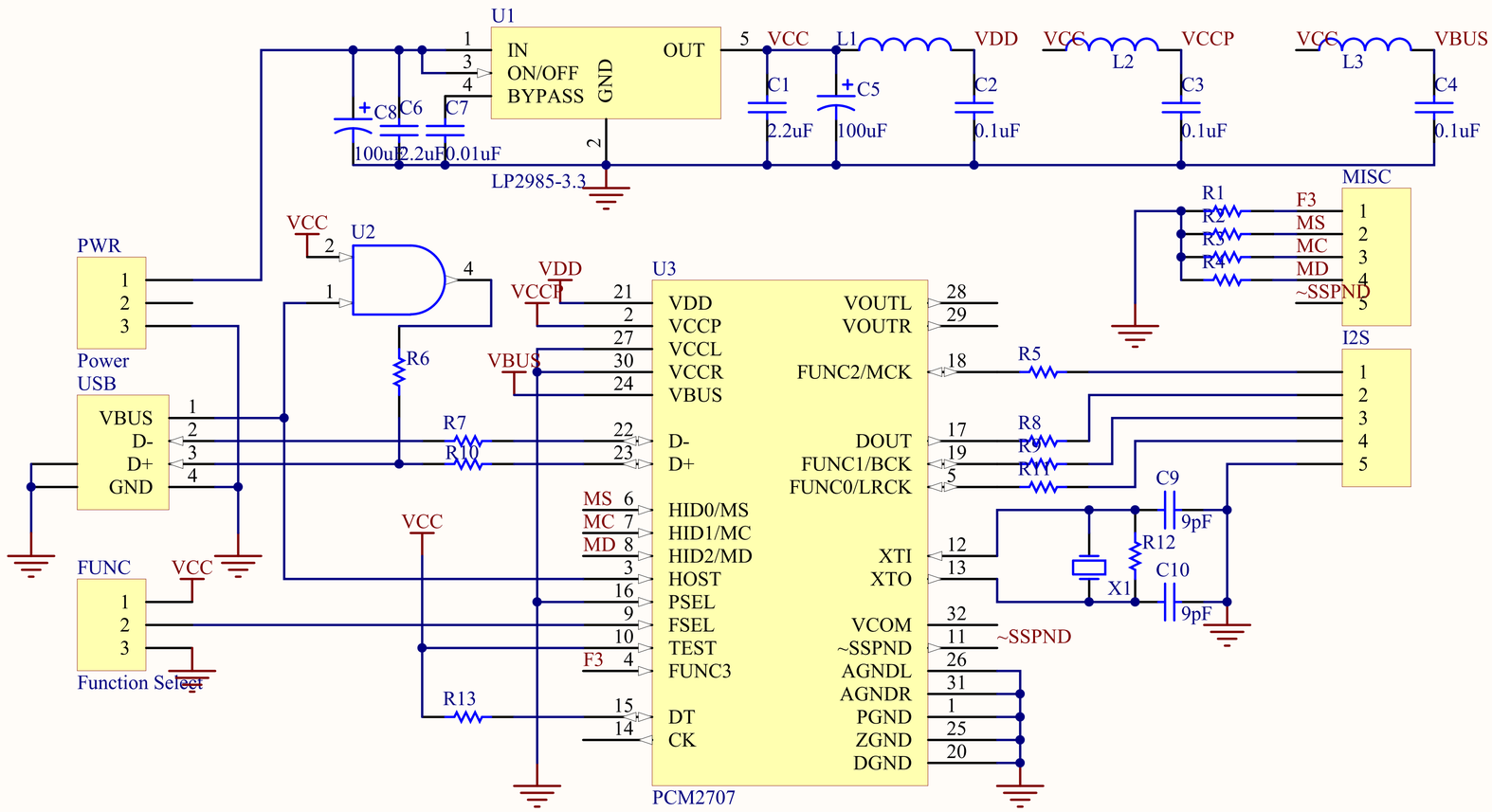

Title		
Size A	Number	Revision
Date: 2/4/2008		Sheet of
File: y:\My Documents\..\miniusb.SchDoc		Drawn By: